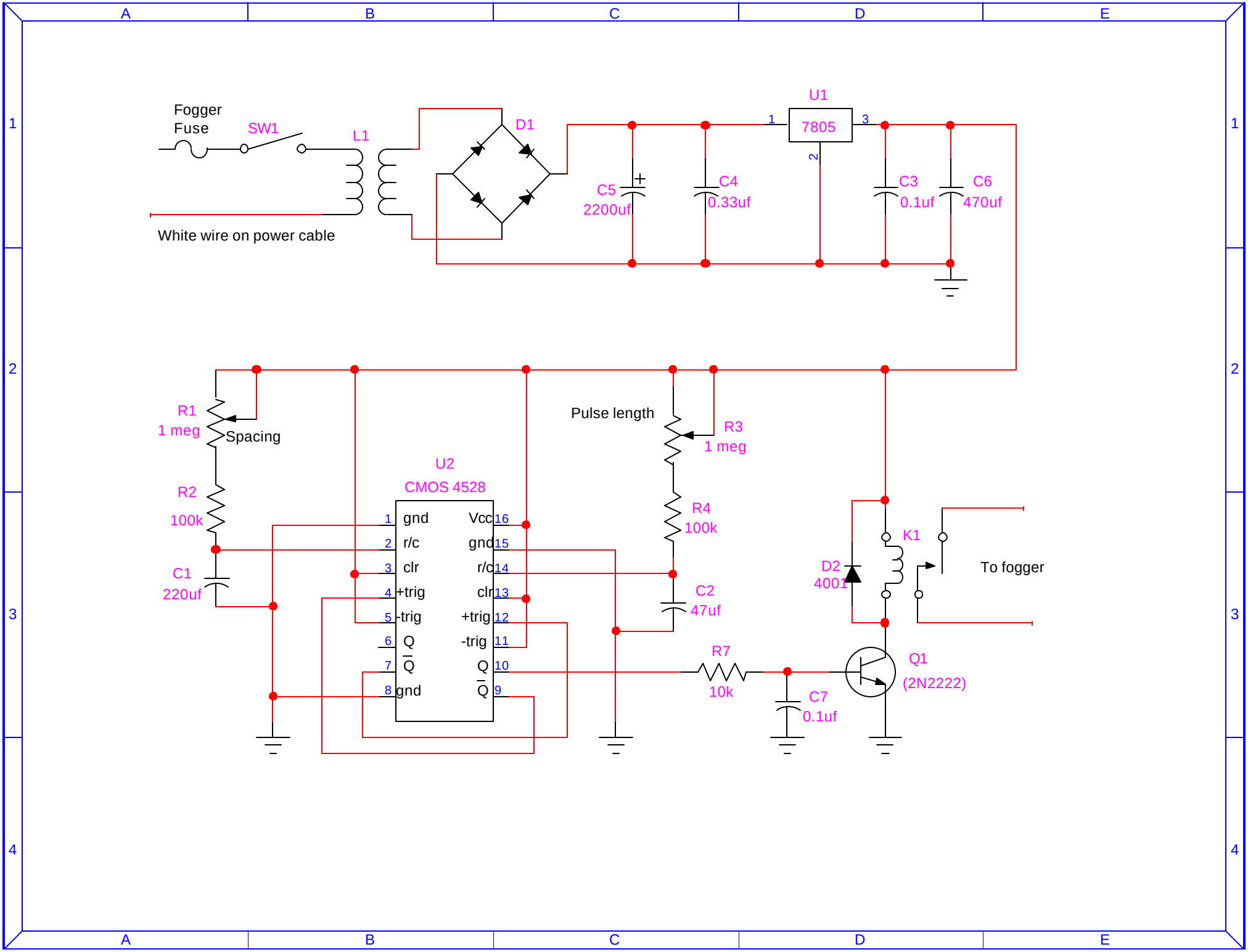
Fogger
Fuse
SW1
L1
D1
U1
7805
1
2
3
C5
2200uf
C4
0.33uf
C3
0.1uf
C6
470uf
White wire on power cable
R1
1 meg
Spacing
R2
100k
C1
220uf
U2
CMOS 4528
gnd
r/c
clr
+trig
-trig
Q
Q̄
gnd
Vcc
gnd
r/c
clr
+trig
-trig
Q
Q̄
Pulse length
R3
1 meg
R4
100k
C2
47uf
R7
10k
C7
0.1uf
D2
4001
K1
To fogger
Q1
(2N2222)